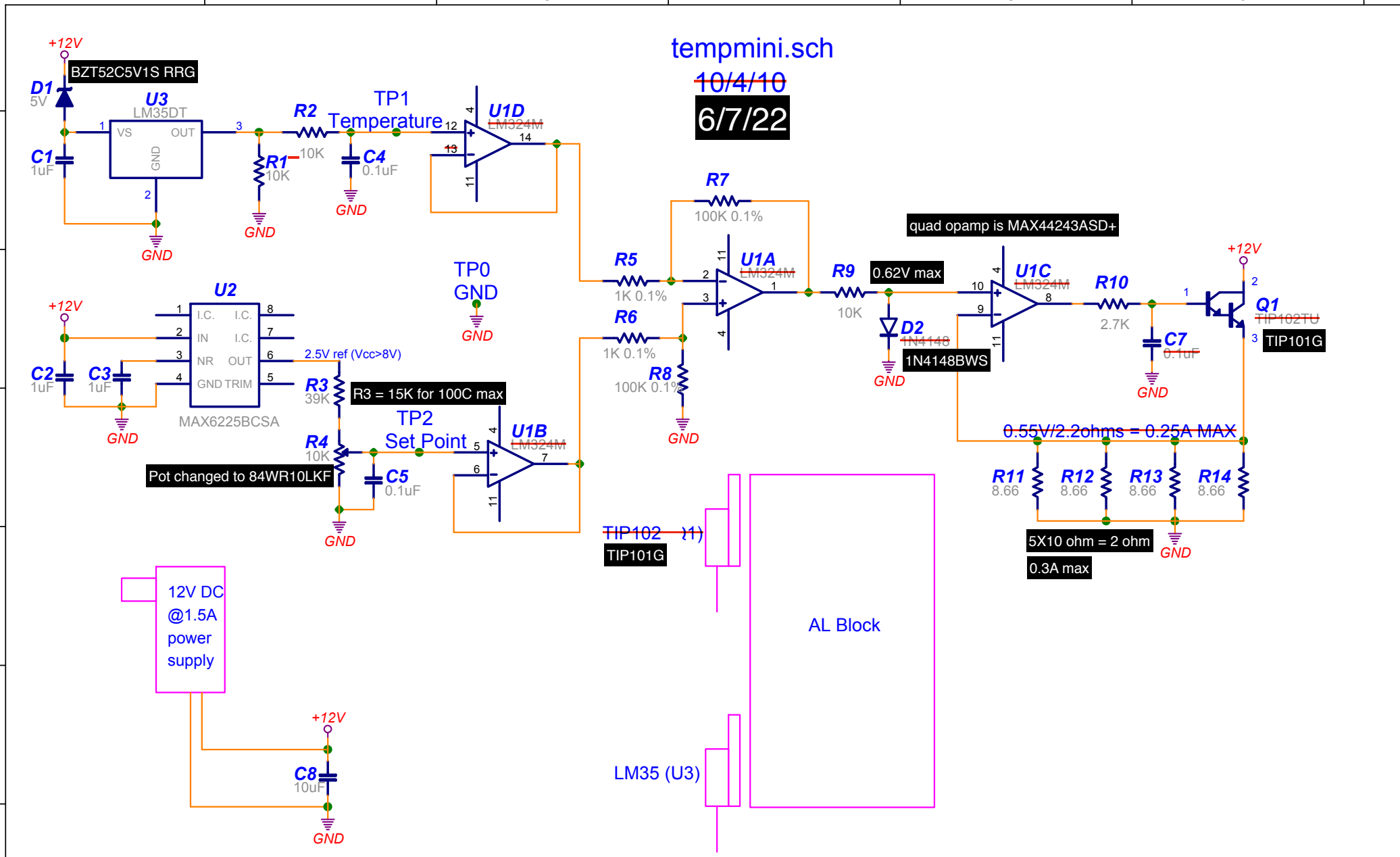
tempmini.sch
~~10/4/10~~
6/7/22
+12V
BZT52C5V1S RRG
D1
5V
U3
LM35DT
VS
OUT
GND
C1
1uF
R2
10K
R1
10K
TP1
Temperature
C4
0.1uF
U1D
~~LM324M~~
GND
TP0
GND
U2
I.C.
IN
NR
OUT
GND TRIM
MAX6225BCSA
C2
1uF
C3
1uF
2.5V ref (Vcc>8V)
R3
39K
R3 = 15K for 100C max
R4
10K
Pot changed to 84WR10LKF
C5
0.1uF
TP2
Set Point
U1B
~~LM324M~~
R7
100K 0.1%
R5
1K 0.1%
R6
1K 0.1%
R8
100K 0.1%
U1A
~~LM324M~~
R9
10K
0.62V max
D2
~~1N4148~~
1N4148BWS
quad opamp is MAX44243ASD+
U1C
~~LM324M~~
R10
2.7K
C7
~~0.1uF~~
Q1
~~TIP102TU~~
TIP101G
~~0.55V/2.2ohms = 0.25A MAX~~
R11
8.66
R12
8.66
R13
8.66
R14
8.66
5X10 ohm = 2 ohm
0.3A max
~~TIP102 (1)~~
TIP101G
AL Block
LM35 (U3)
12V DC
@1.5A
power
supply
C8
10uF